TG drives

TGZ

digital servoamplifiers

TGZ digital servoamplifiers

TGZ digital servoamplifiers bring a new concept of digital servoamplifiers for multi-axis applications. TGZ include features of modern digital control, predefined functions that user can call in his own program, connection to fast digital communication interfaces, connection of modern digital feedback sensors, low dissipation of power components and unique cooling system. Thanks to the use of these new technologies it was possible to optimize size, reduce number of pins in connectors and to implement two power units for controlling of two servomotors into the same space. TGZ represents an economic, but a high-quality solution for controlling servomotors.

STO Certification

Utilizing the STO system that relates to safety of servo amplifiers, TGZ devices meet the standards of ČSN which sets requirements of integrity safety levels SIL3 and level of properties PL e.

Main features of TGZ servoamplifiers include:

Processor

Basic component of TGZ servoamplifier is a compact two-core processor with an integrated functions of gate array providing sufficient computing power for controlling two motors and a fast communication with supervising and feedback systems. Two-core solution gives the possibility to divide processes which considerably improves the stability of system, mainly during the communication with external systems. Compact design of processor contributes to speed increase of internal data transfer.

Communication

Servoamplifier TGZ is equipped with three communication channels:

- Ethernet 100/1 000 Mb/s with UDP protocol, dedicated for parameters download, monitoring, testing but also for on-line control,
- CAN bus protocol can be modified according to customer request,
- Ethernet 100/1 000 Mb/s with selectable protocol, programmed in gate array and dedicated for connecting fast industrial interfaces for the real-time controlling. This interface is currently equipped with EtherCat or PROFINET (ProfiDrive) protocols (depends on firmware).

Power module

Power module uses surface mounted modern power transistors. Even when transistors are switching with a high frequency (20 kHz) switch loss is optimized and besides that a unique system of heat dissipation from printed board to heat sink makes the mechanical design much simpler and contributes to reduction of servoamplifier dimensions.

Feedback

TGZ servoamplifier gives the possibility to connect modern digital absolute position sensors with DSL, EnDat2.2, SSI communication or BISS-C protocol. DSL sensors allow one connector (cable) design of servomotors which contributes to economic and high-efficient design of the whole drive. Used sensors can be of single-turn or multi-turn design.

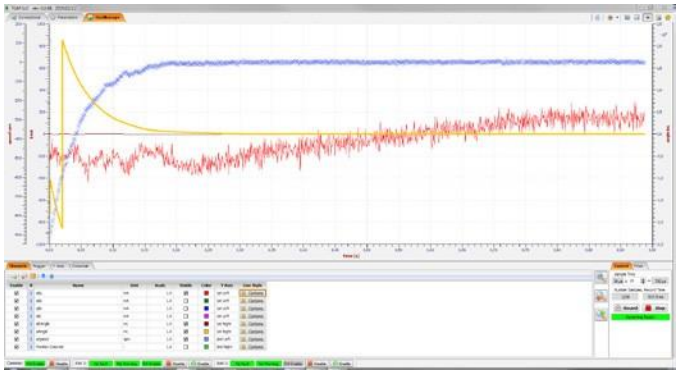

Controllers

Digital controllers of torque, speed and position work in fast closed-loops and therefore they guarantee high quality of servomotor operation. Current loop works with a frequency of 40 kHz, speed and position with a frequency of 20 kHz. Motor parameters can be readout from feedback sensors. In order to reach the highest uniformity of movement there are values of “stepping” stored into motor sensors and servoamplifier can compensate these during running.

TGZ GUI – control software, monitoring

Control (service) program TGZ GUI communicates with servoamplifier via Ethernet interface with UDP protocol. Fast communication enables to update parameters frequently. It is mainly the function of oscillo- scope which allows to track graphical processes almost on-line.

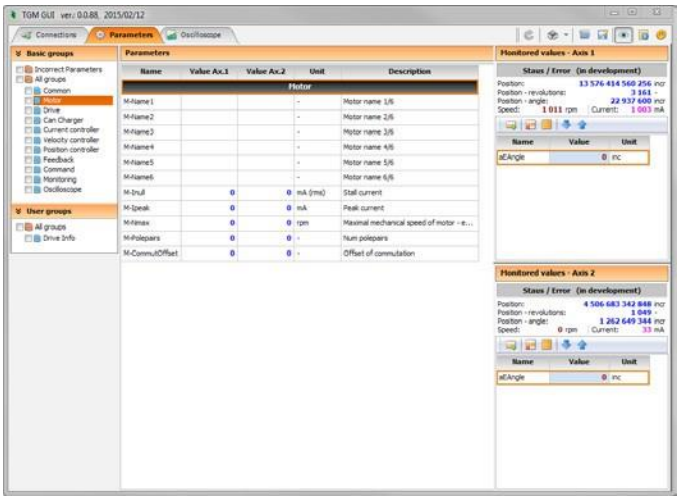

Programming

TGZ servoamplifiers have implemented so called C (programming language) interpreter which allows, when necessary to create specific internal functions directly in TGZ servoamplifiers. Processing one in-struction takes about 47 ns and this assures very quick running of user program. User program has access to motion functions of servoampli- fier, to internal parameters (position, speed, current etc.) and to digital and analog inputs and outputs. Function Debug and syntax checking are performed in development environment.

Program storage and parameters set upload to micro SD card, no PC required for commissioning.

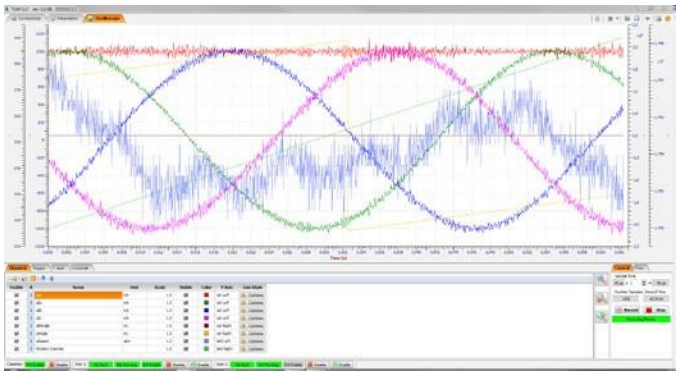

Example of marking

TGZ-a-b-c/d-xxx

a = number of controlled axes:

S = 1-axis
D = 2-axis

b = power supply:

48 V DC
320 V DC
560 V DC
230 V AC

c = rated output current

d = maximum output current

xxx = communication

CAN = CAN bus

ETH = EtherCAT

UNI=CAN,EtherCAT or PROFINET

Technical data:

TGZ-48

The TGZ-48 servoamplifiers are a low-voltage version for voltages up to 48 V DC, which is intended, for example, for mobile devices or devices requiring safe voltage. The TGZ-48 allows you to control one or two servomotors.

TGZ	D-48-13/26	S-48-50/100	D-48-50/100
POWER SUPPLY			
Control voltage	24 V DC ± 10 %		
Power supply	6 – 48 V DC		
Installed power for S1 operation	1 kW	4,8 kW	4,8 kW
Rated output current — 1 axis	15 A	50 A	50 A
Total output current — 2 axis	30 A	—	100 A
Maximum output current (max. 5 s)	2 × 30 A	100 A*	2 × 100 A
Losses at rated load	20 W	30 W	50 W
COMMUNICATION			
CAN	4pin WEIDMÜLLER S2C-SMT 3.50		
ETHERCAT IN/OUT	100/1000 Mb/s, 2 × RJ45		
ETHERNET UDP (for service)	100/1000 Mb/s, RJ45		
INPUTS/OUTPUTS			
2 AI, 8 DI, 6 DO (see page 4) — possibility of control by user program (C programming language)	1 × 22pin WEIDMÜLLER S2C-SMT 3.50		
SIGNALING			
LED display	Error message, 2×7–segment LED		
LED signaling (axis 1 and 2 separately)	AXIS 1: 1 × green (SERVO OK), 1 × red (SERVO ERROR) AXIS 2: 1 × green (SERVO OK), 1 × red (SERVO ERROR)		
OTHER CONNECTORS			
Power supply connector	1 × 2pin PHOENIX PC5/2-GU 7.62	1x Erni Screw terminals 2.2Nm M5 PRESFIT	1 x WAGO clamps
Control voltage connector	1x 5pin WEIDMÜLLER SC 3.81/05	1x 5 pin MOLEX micro-lock	1x 5pin WEIDMÜLLER SC 3.81/05
Motor connector	2 × 6pin WEIDMÜLLER SL-SMT 5.08/06	1x Erni Screw terminals 2.2Nm M5 PRESFIT	2 x WAGO clamps
Brake connector	–	1x 4 pin molex micro-lock + external temperature sensor	1 × 6pin WEIDMÜLLER SL-SMT 5.00HC/20
Feedback connector	2 × 8pin WEIDMÜLLER S2C-SMT 3.50		
External encoder connector	1 × 12pin WEIDMÜLLER S2C-SMT 3.50		

** Version with maximum output current 125 A available on request.*

TGZ	S-48-100/250	S-48-100/300	S-48-100/425
POWER SUPPLY			
Control voltage	24 V DC ± 10 %		
Power supply	6 – 48 V DC		
Installed power for S1 operation	4,8 kW	4,8 kW	4,8 kW
Rated output current — 1 axis	100 A	100 A	100 A
Total output current — 2 axis	-	-	-
Maximum output current (max. 5 s)	250 A	300 A	425 A
Losses at rated load	70 W	70 W	70 W
COMMUNICATION			
CAN	4pin WEIDMÜLLER S2C-SMT 3.50		
ETHERCAT IN/OUT	100/1000 Mb/s, 2 × RJ45		
ETHERNET UDP (for service)	100/1000 Mb/s, RJ45		
INPUTS/OUTPUTS			
2 AI, 8 DI, 6 DO (see page 4) — possibility of control by user program (C programming language)	1 × 22pin WEIDMÜLLER S2C-SMT 3.50		
SIGNALING			
LED display	Error message, 2×7–segment LED		
LED signaling (axis 1 and 2 separately)	AXIS 1: 1 × green (SERVO OK), 1 × red (SERVO ERROR) AXIS 2: 1 × green (SERVO OK), 1 × red (SERVO ERROR)		
OTHER CONNECTORS			
Power supply connector	8x Erni Screw terminals 2.2Nm M5 PRESFIT		
Control voltage connector	1 x 5pin MOLEX Micro-Fit 3.0, 43650-0518		
Motor connector	3 x Wurth screw terminals M8 PRESSFIT, 7461099		
Brake connector	1 x 4pin MOLEX Micro-Fit 3.0, 43045-0412		
Feedback connector	2 × 8pin WEIDMÜLLER S2C-SMT 3.50		
External encoder connector	1 × 12pin WEIDMÜLLER S2C-SMT 3.50		

TGZ-320

The TGZ-D-320 servoamplifier allows the control of two servomotors and is intended for the connection of 320 V DC voltage from the TGS-320-10 / 15 power supply module. The TGZ-S-230 version contains an integrated power supply module for connection to a single-phase 230 V AC supply and allows the control of one servomotor.

TGZ	D-320-5/10	D-320-5/15	S-230-5/15
POWER SUPPLY			
Control voltage	24 VDC ± 10 %		
Power supply	140 – 320 VDC		230 V AC
Installed power for S1 operation	2,6 kW	2,6 kW	1,6 kW
Rated output current — 1 axis	5 A	5 A	5 A
Total output current — 2 axis	8 A	8 A	-
Maximum output current (max. 5 s)	2 × 10 A	2 × 15 A	15 A
Losses at rated load	20 W	20 W	15 W
COMMUNICATION			
CAN	4pin WEIDMÜLLER S2C-SMT 3.50		
ETHERCAT IN/OUT	100/1000 Mb/s, 2 × RJ45		
ETHERNET UDP (for service)	100/1000 Mb/s, RJ45		
INPUTS/OUTPUTS			
2 AI, 8 DI, 6 DO (see page 4) — possibility of control by user program (C programming language)	1 × 22pin WEIDMÜLLER S2C-SMT 3.50		
SIGNALING			
LED display	Error message, 2×7–segment LED		
LED signaling (axis 1 and 2 separately)	AXIS 1: 1 × green (SERVO OK), 1 × red (SERVO ERROR) AXIS 2: 1 × green (SERVO OK), 1 × red (SERVO ERROR)		
OTHER CONNECTORS			
Power supply connector	1 × 3pin PHOENIX PC5/3-G 7.62	1 × 3pin PHOENIX PC5/3-G	1 × 10pin WEIDMÜLLER SL-SMT 5.08HC/10
Control voltage connector	1x 5pin WEIDMÜLLER SC 3.81/05		
Motor connector	2 × 6pin WEIDMÜLLER BLL 5.08/06		
Brake connector	–	–	–
Feedback connector	2 × 8pin WEIDMÜLLER S2C-SMT 3.50		
External encoder connector	1 × 12pin WEIDMÜLLER S2C-SMT 3.50		

TGZ-400

The TGZ-400 servo amplifier is designed to control single high-power servomotor. The TGZ-400 is connected to a voltage of 400 V AC.

TGZ	S-400-3/9	S-400-7/15	S-400-10/20	S-400-14/30
POWER SUPPLY				
Control voltage				
Power supply	400 VAC			
Installed power for S1 operation	1,7 kW	3,9 kW	5,6 kW	8,4 kW
Rated output current — 1 axis	3 A	7 A	10 A	14 A
Total output current — 2 axis	-	-	-	-
Maximum output current (max. 5 s)	9 A	15 A	20 A	30 A
Losses at rated load	30 W	50 W	70 W	110 W
Operating frequency	20 kHz	20 kHz	20 kHz	20 kHz
COMMUNICATION				
CAN	4pin WEIDMÜLLER S2C-SMT 3.50			
ETHERCAT IN/OUT	100/1000 Mb/s, 2 × RJ45			
ETHERNET UDP (for service)	100/1000 Mb/s, RJ45			
INPUTS/OUTPUTS				
2 AI, 8 DI, 6 DO (see page 4) — possibility of control by user program (C programming language)	1 × 22pin WEIDMÜLLER S2C-SMT 3.50			
SIGNALING				
LED display	Error message, 2×7–segment LED			
LED signaling (axis 1 and 2 separately)	AXIS 1: 1 × green (SERVO OK), 1 × red (SERVO ERROR) AXIS 2: 1 × green (SERVO OK), 1 × red (SERVO ERROR)			
OTHER CONNECTORS				
Power supply connector	1x12pin WEIDMÜLLER BLZ 7.62HP/12/180F			
Control voltage connector	1x5pin WEIDMÜLLER BCZ 3.81/05/180F			
Motor connector	1x6pin WEIDMÜLLER BLF 7.62HP/06/180F			
Brake connector	-			
Feedback connector	2 × 8pin WEIDMÜLLER S2C-SMT 3.50			
External encoder connector	1 × 12pin WEIDMÜLLER S2C-SMT 3.50			

TGZ-560

The TGZ-560 servo amplifier is designed to control up to two high-power servomotors. The TGZ-560 is connected to a voltage of 560 V DC.

TGZ	D-560-30/50
POWER SUPPLY	
Control voltage	24 V DC ± 10 %
Power supply	24 – 560 V DC
Installed power for S1 operation	33 kW
Rated output current — 1 axis	30 A
Total output current — 2 axis	60 A
Maximum output current (max. 5 s)	2 × 50 A
Losses at rated load	900 W
COMMUNICATION	
CAN	4pin WEIDMÜLLER S2C-SMT 3.50
ETHERCAT IN/OUT	100/1000 Mb/s, 2 × RJ45
ETHERNET UDP (for service)	100/1000 Mb/s, RJ45
INPUTS/OUTPUTS	
2 AI, 8 DI, 6 DO (see page 4) — possibility of control by user program (C programming language)	1 × 22pin WEIDMÜLLER S2C-SMT 3.50
SIGNALING	
LED display	Error message, 2×7–segment LED
LED signaling (axis 1 and 2 separately)	AXIS 1: 1 × green (SERVO OK), 1 × red (SERVO ERROR) AXIS 2: 1 × green (SERVO OK), 1 × red (SERVO ERROR)
OTHER CONNECTORS	
Power supply connector	1x Screw terminals M8x12
Control voltage connector	1x 5pin WEIDMÜLLER SC 3.81/05
Motor connector	2 × WAGO clamps
Brake connector	2 × WAGO clamps + external temperature sensor
Feedback connector	2 × 8pin WEIDMÜLLER S2C-SMT 3.50
External encoder connector	1 × 12pin WEIDMÜLLER S2C-SMT 3.50

TGZ-D-48-13/26

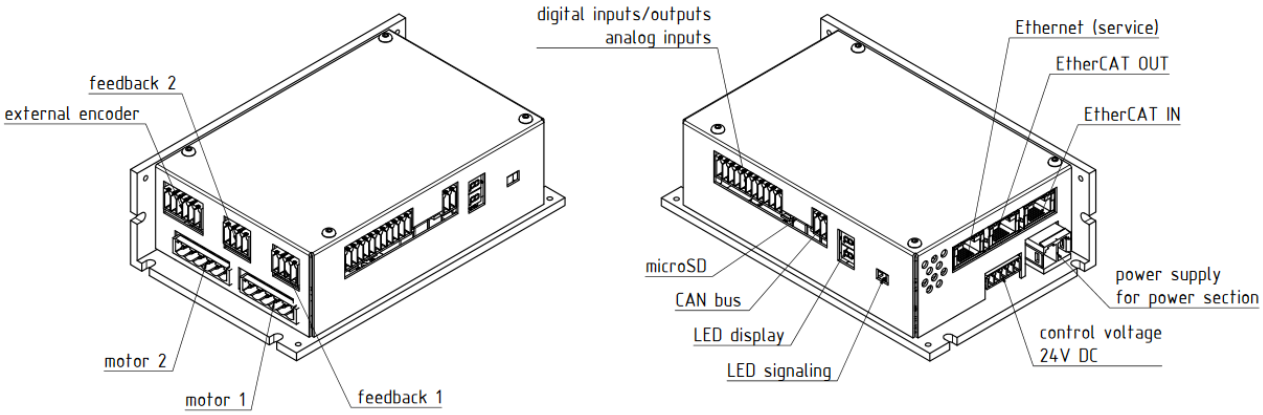

TGZ-S-48-50/100

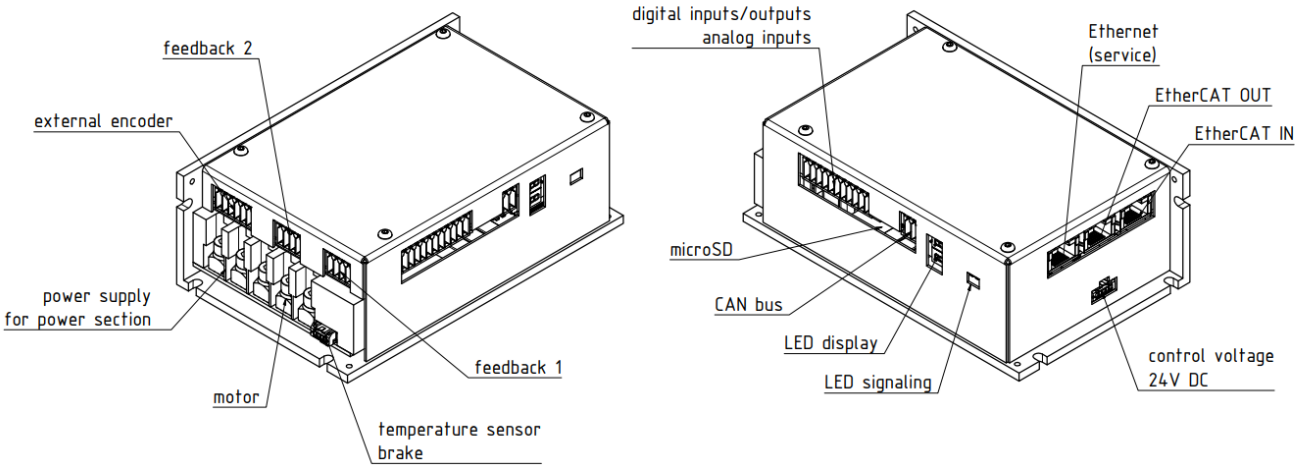

TGZ-D-48-50/100

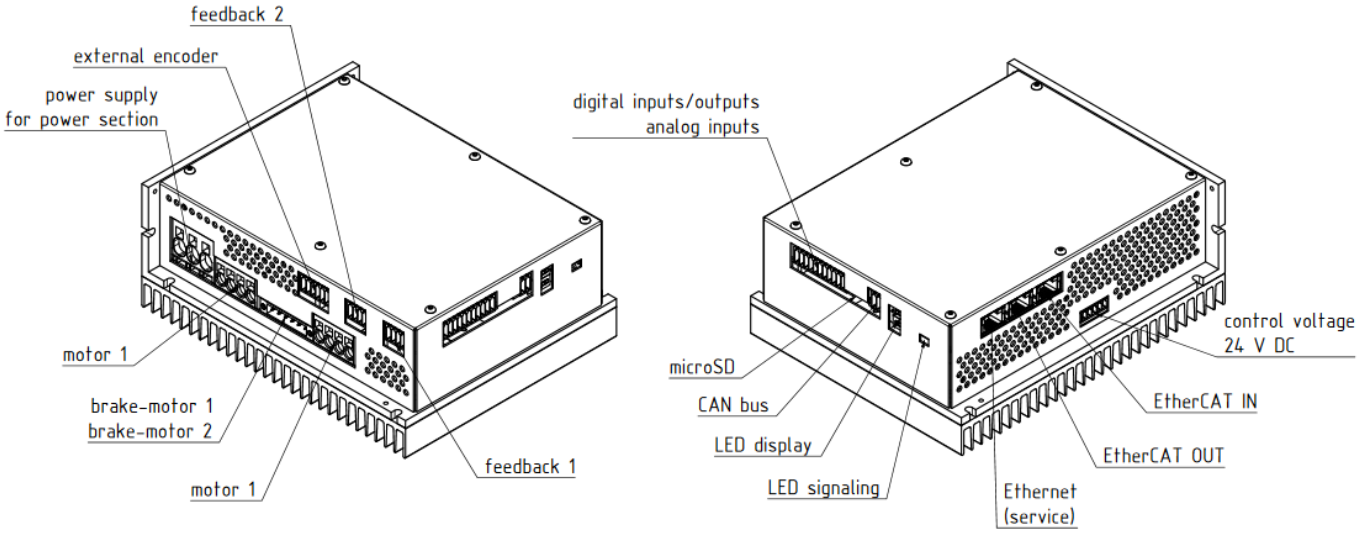

TGZ-S-48-100/250

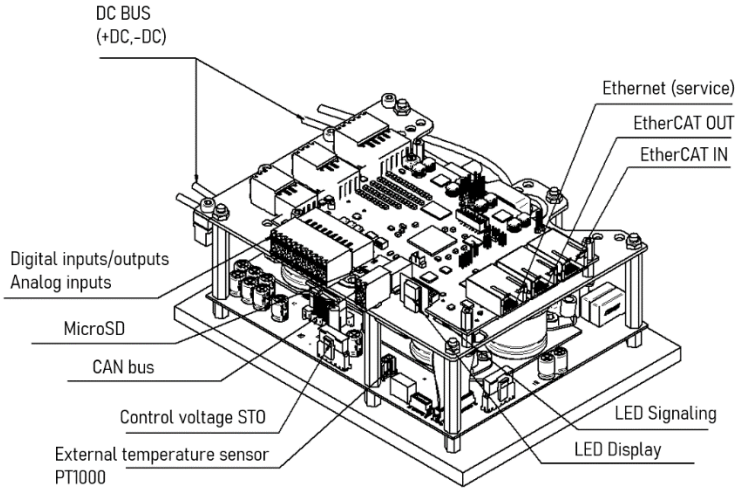

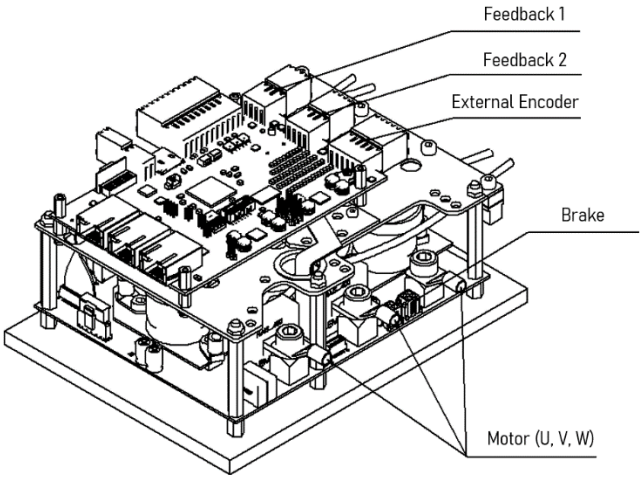

TGZ-S-230-5/15

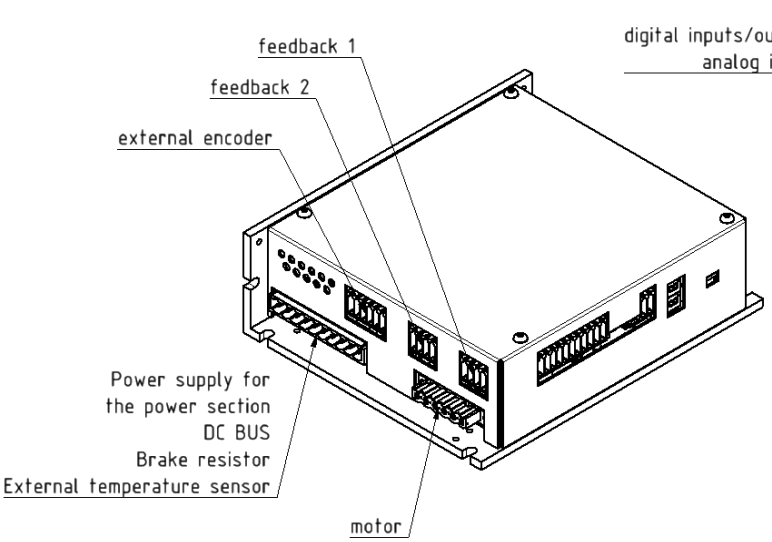

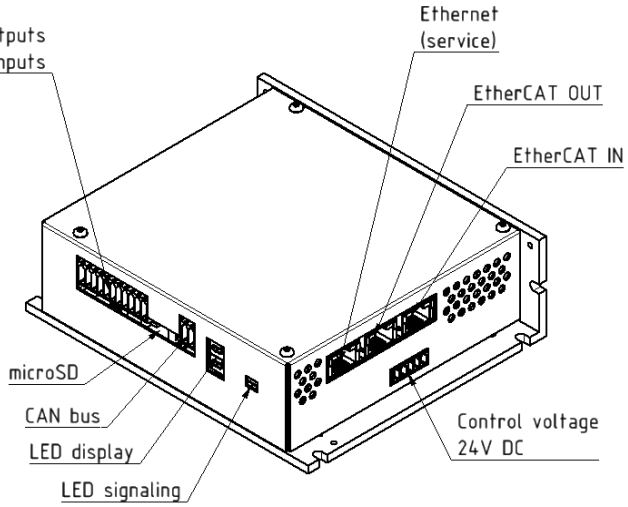

TGZ-D-320-5/10, TGZ-D-320-5/15

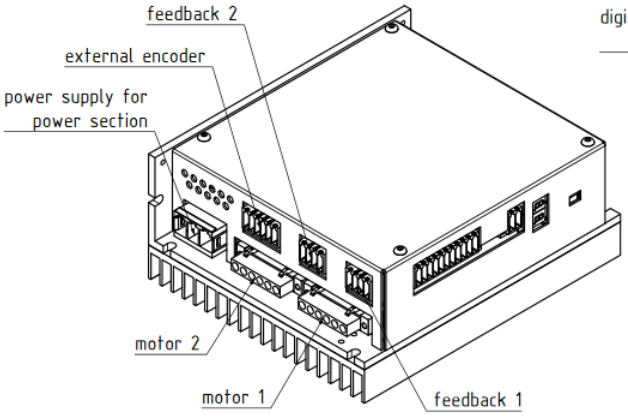

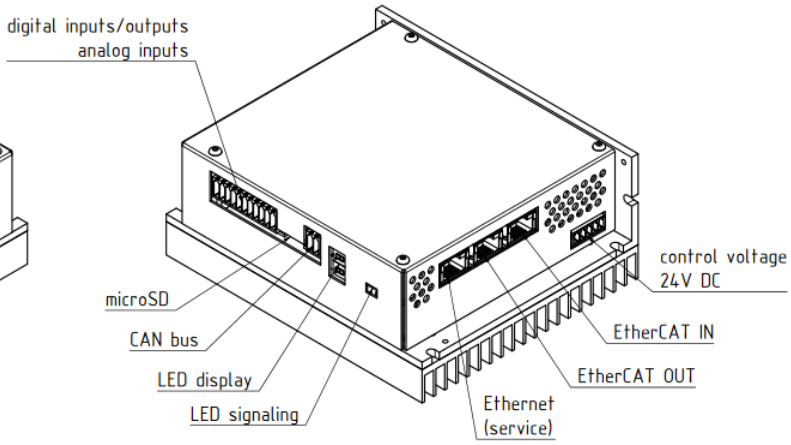

TGZ-S-400-3/9, TGZ-S-400-7/15,

TGZ-S-400-10/20, TGZ-S-400-14/30

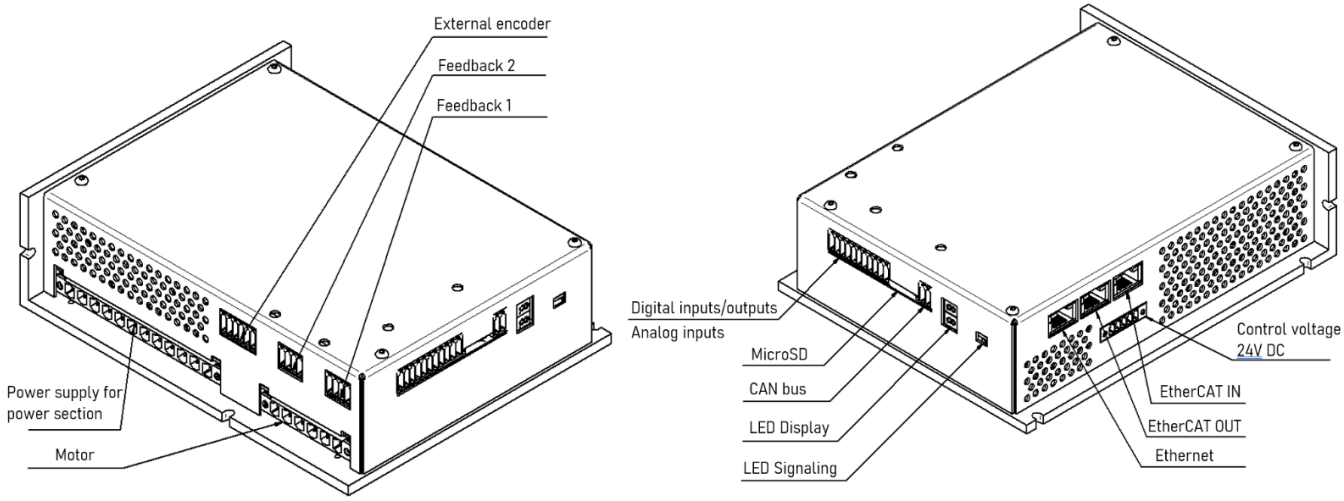

TGZ-D-560-30/50

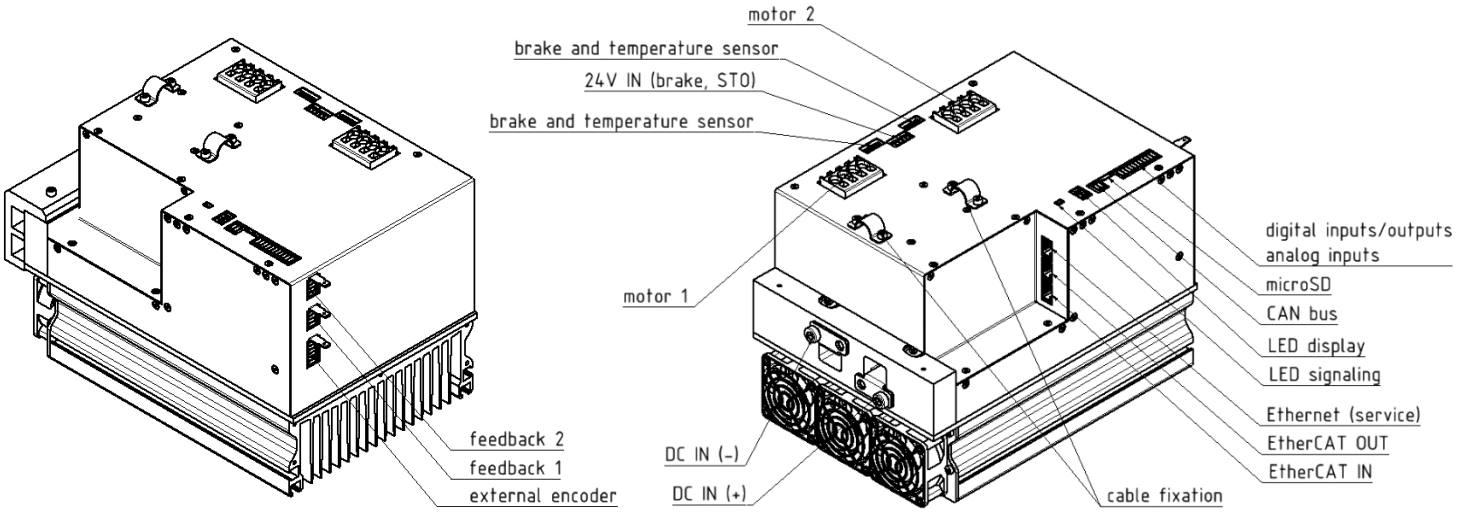

Dimensions:

TGZ-D-48-13/26:

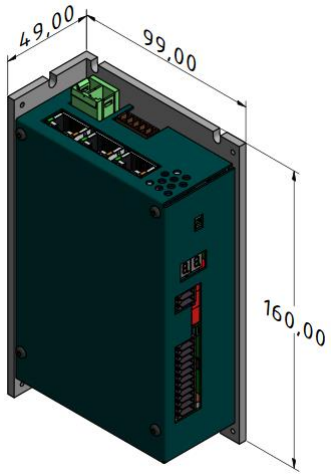

Dimensions:
160 × 49 × 99 mm
(height × width × depth)

Dimensions including connector counterparts:
178 × 49 × 116 mm (height × width × depth)

Weight: 0,8 kg

TGZ-S-48-50/100:

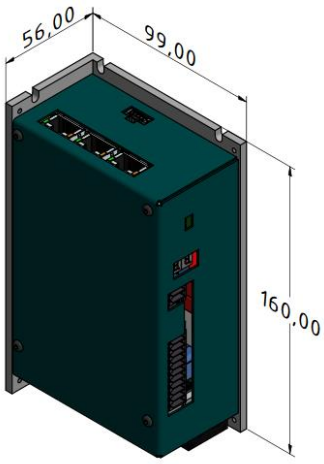

Dimensions.
160 × 56 × 99 mm
(height × width × depth)

Dimensions including connector counterparts:
178 × 59 × 116 mm
(height × width × depth)

Weight: 0,9 kg

TGZ-D-48-50/100:

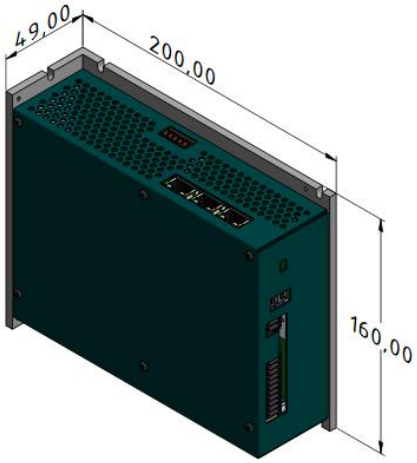

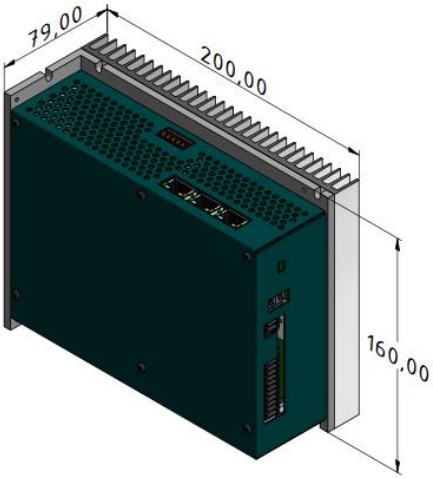

Dimensions:
160 × 49 × 200 mm (height × width × depth)

Dimensions including connector counterparts:
172 × 49 × 217 mm (height × width × depth)

Weight: 1,6 kg

Dimensions of version with additional cooler:
160 × 79 × 200 mm (height × width × depth)

Weight: 2,3 kg

TGZ-S-48-100/250:

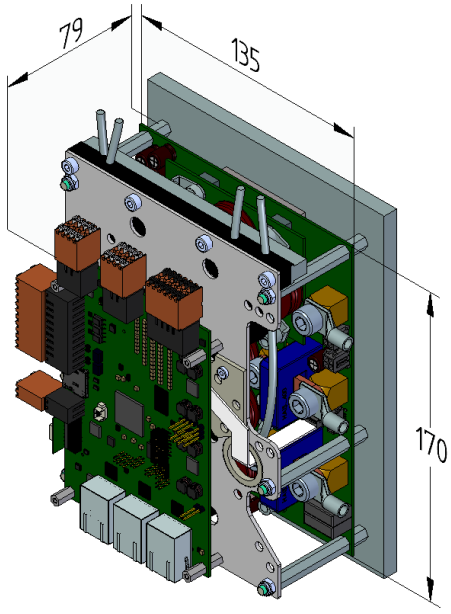

Dimensions:
170 × 79 × 135 mm
(height × width × depth)

Dimensions including connector counterparts:
182 × 56 × 154 mm
(height × width × depth)

Weight: 1,6 kg

TGZ-S-230-5/15:

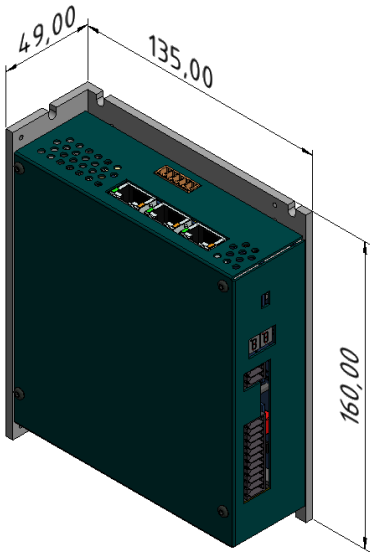

Dimensions:
160 × 49 × 135 mm
(height × width × depth)

Dimensions including connector counterparts:
172 × 49 × 154 mm
(height × width × depth)

Weight: 1 kg

TGZ-D-320-5/10, TGZ-D-320-5/15:

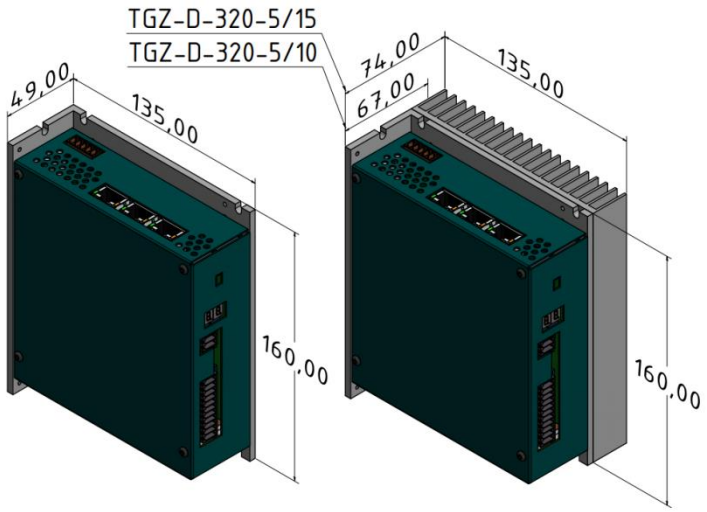

Dimensions:
160 × 49 × 135 mm (height × width × depth)

Dimensions including connector counterparts:
172 × 49 × 152 mm (height × width × depth)

Weight: 1 kg

Dimensions of TGZ-D-320-5/10 with additional cooler:
160 × 67 × 135 mm (height × width × depth)

Weight ofTGZ-D-320-5/10 with additional cooler:
1,2 kg

Dimensions of TGZ-D-320-5/15 with additional cooler:
160 × 74 × 135 mm (height × width × depth)

Weight of TGZ-D-320-5/15 with additional cooler:
1,3 kg

TGZ-S-400-3/9, TGZ-S-400-7/15, TGZ-S-400-10/20:

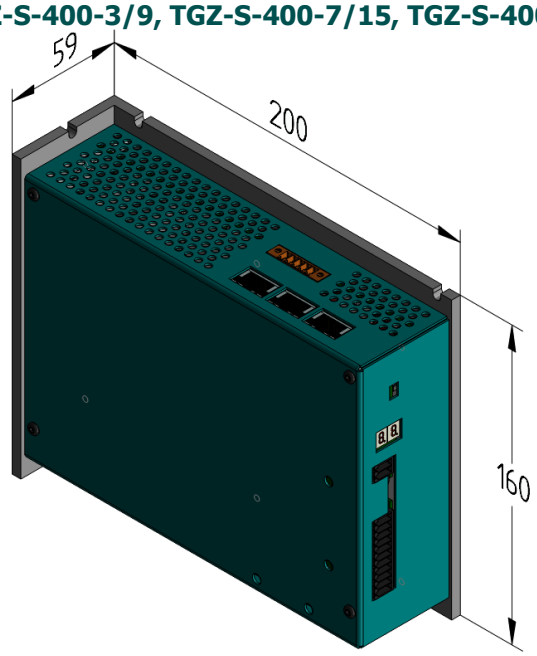

Dimensions:
160 × 200 × 59 mm
(height × width × depth)

Dimensions including connector counterparts:
178 × 204 x 64 mm
(height × width × depth)

Weight: 1,6 kg

TGZ-S-400-14/30:

Dimensions:
160 × 200 × 78,1 mm
(height × width × depth)

Dimensions including connector counterparts:
178 × 204 × 83,1 mm
(height × width × depth)

Weight: 2,3 kg

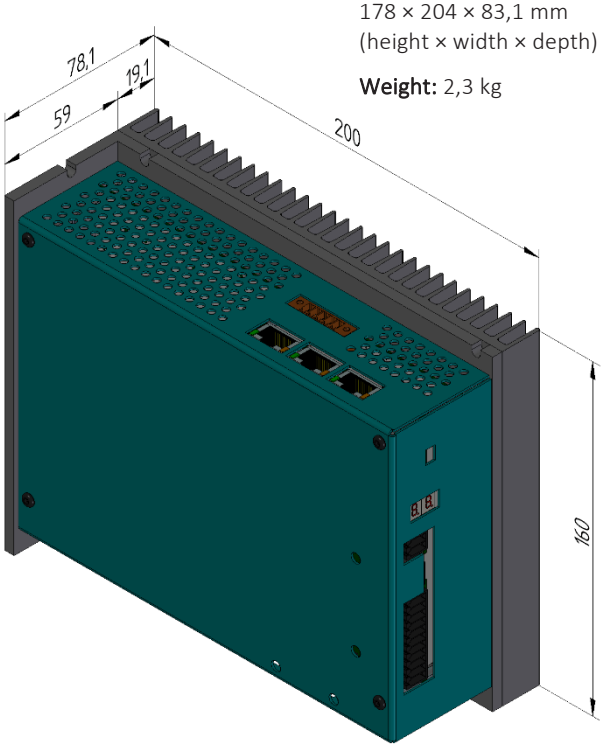

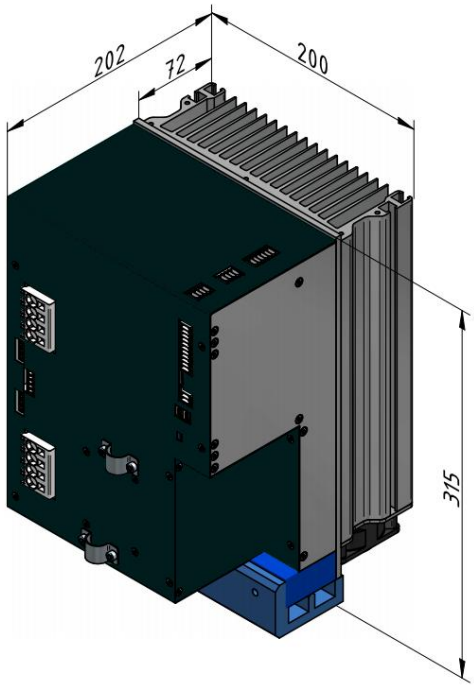

TGZ-D-560-30/50:

Dimensions:
315 × 200 × 130mm
(height × width × depth)

Dimensions including connector counterparts:
319 × 200 × 206 mm
(height × width × depth)

Weight: 10,15 kg

Types of supported feedbacks:

TGZ digital servoamplifiers support the following types of feedbacks:

- Hiperface DSL – **digital communication, sensors are manufactured with a resolution of 15 to 24 bits per turn, multi-turn version – 4 096 turns. This is used on motors with one connector or cable.**
- EnDat 2.2 – **digital communication, sensors are manufactured with a resolution of 18 to 25 bits per turn, multi-turn version – 4 096 turns.**
- SSI – **Encoders with Synchronous Serial Interface.**
- BISS – **feedback sensors with BISS-C protocol.**
- Hall effect sensors

Inputs / outputs:

TGZ servoamplifiers have implemented 8 digital inputs, 6 digital outputs and 2 analog inputs:

I/O	Type	Number	Value
input	**analog**	**2**	**0—10 V**
input	**digital**	**8**	**24 V DC (0—10 low / 12—24 high), 20 mA**
output	**digital**	**6**	**5–24 V DC, 300 mA/ output**

Controlling:

TGZ servoamplifiers can be controlled by:

- digital control via EtherCAT bus, CAN bus (torque, speed, position profiles etc.) and Ethernet UDP (more details in parameters table on page 3)
- user program (C programming language) — digital inputs, analog voltage etc.

Power supply module TGS-320-10/15

	TGS-320-10/15
PARAMETRS	
Input voltage (VAC – 50/60 Hz)	1 × 230 V AC
Maximum input current (AC)	16 A
Output voltage (DC)	320 V DC
Maximum continuous output current (DC)	10 A
Maximum peak output current (DC, 1 s)	15 A
Maximum output power	3 200 W
Maximum brake power (internal resistor)	100 W
Maximum brake power (external resistor)	3 200 W
Loss at maximum output power	80 W
Fusing	16 A
OUTPUTS	
Digital output Ready (open collector)	Max. 30 V/2 A
Digital output Temp Error (open collector)	Max. 30 V/2 A
SIGNALING	
LED signaling	1 × green (Ready), 1 × red (Temp Error)
CONNECTORS	
Mains connector	3–pin PHOENIX PC 5/3-G-7.62
DCBUS connector	8–pin PHOENIX PC 5/8-G-7.62
Control connector	3–pin PHOENIX MC 1.5/3-G 3.81

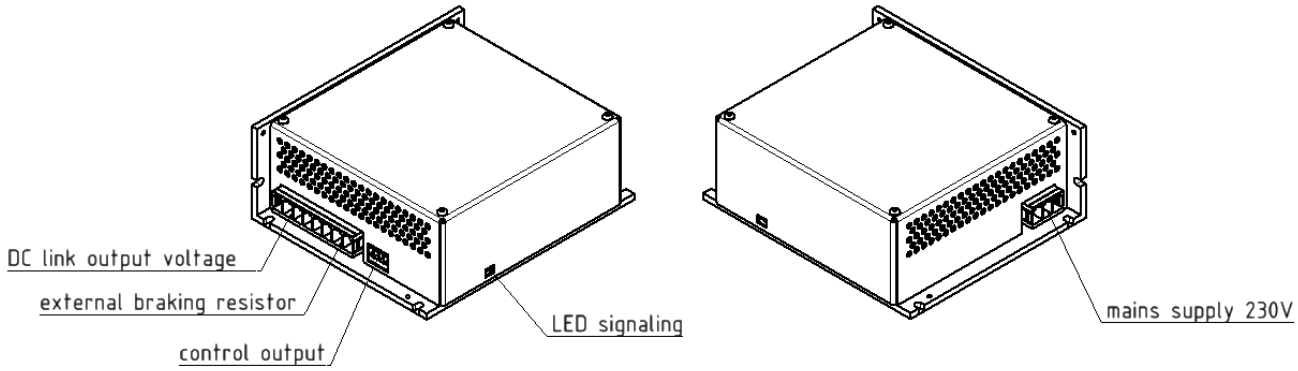

Dimensions:

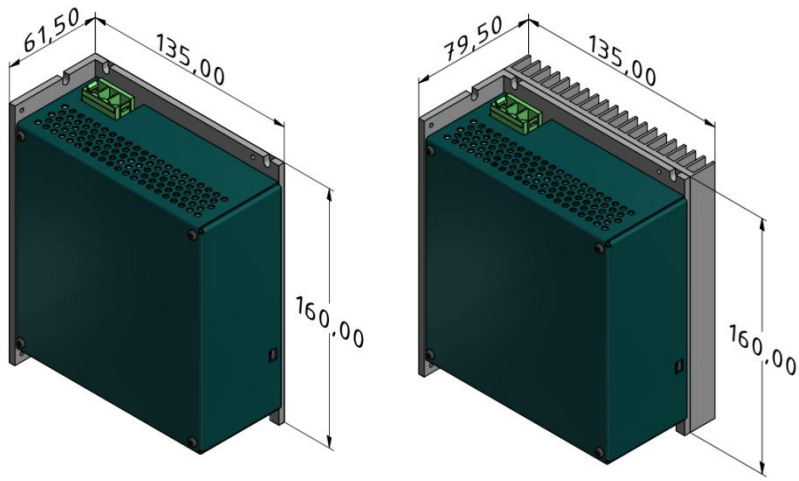

TGS-320-10/15:

Unit power supply:
160 × 61,5 × 135 mm (height × width × depth)

Dimensions of version with additional cooler:
160 × 79,5 × 135 mm (height × width × depth)

Dimensions including connector counterparts:
184 × 61,5 × 135 mm (height × width × depth)

Weight: 1,2 kg

Servomotors ◆ Servoamplifiers ◆ Gearboxes ◆ Control systems

TG Drives, s. r. o.
Olomoucká 1290/79 CZ
627 00 Brno

Tel.: +420 548 141 811
Fax: +420 548 141 890
E-mail: info@tgdrives.cz

www.tgdrives.com

12/2020